Semantic Codebase Orchestration in AI Agents: An Architectural Deep Dive into LSP, Tree-sitter, and MCP Integration

The rapid evolution of autonomous coding agents has precipitated a fundamental shift in how artificial intelligence interacts with software repositories. Early iterations of large language models relied on naive text searches and regular expressions to navigate code, an approach that inevitably fractured when applied to enterprise-scale, multi-file architectures.[1] Today, state-of-the-art coding agents achieve deterministic codebase understanding by implementing a dual-engine architecture. This advanced paradigm leverages Tree-sitter for instantaneous, structural parsing alongside the Language Server Protocol (LSP) for deep, cross-file semantic analysis.[2] The integration of these two distinct technologies allows artificial intelligence to perceive a codebase not merely as a collection of text strings, but as a dynamic, interconnected graph of logic, types, and operational constraints.

Building an agentic command-line interface tool for codebase orchestration, particularly one operating within the highly concurrent Go ecosystem, introduces significant inter-process communication challenges. A prominent failure mode involves asynchronous agents deadlocking against long-running language servers due to unmanaged standard input and output streams operating within raw shell execution paradigms.[4] Resolving these deadlocks requires moving beyond rudimentary script execution and adopting sophisticated asynchronous orchestration frameworks.

This comprehensive architectural analysis examines how leading agentic systems—such as Cursor, Aider, Devin, Continue.dev, and Claude Code—solve inter-process communication deadlocks, design function abstractions for large language models, manage enormous semantic data payloads, and autonomously provision their operating environments. Based on an exhaustive review of these open-source and proprietary mechanisms, a definitive implementation roadmap is synthesized for constructing robust, non-blocking agentic orchestration interfaces.

Architectural Bridging and Inter-Process Communication Synchronization

The fundamental challenge in orchestrating a language server via an artificial intelligence agent involves bridging the non-deterministic, iterative execution loop of a large language model with the highly structured, stateful, and asynchronous nature of the JSON-RPC 2.0 protocol utilized by language servers.[7] Language servers operate on the premise of continuous, persistent connection, which inherently conflicts with the stateless, request-and-response mechanics

typically employed by basic script execution environments.

The Mechanics of Inter-Process Deadlocks and Raw Shell Failures

The phenomenon of an agent experiencing an infinite hang when invoking a tool like the Go language server directly via a raw shell execution tool is a well-documented inter-process communication failure. Language servers are not designed to execute a single command, emit a standard output response, and terminate gracefully.[7] Instead, they are architected as persistent daemon processes intended to be managed by a continuously running integrated development environment.

When an agent executes a language server via a standard shell wrapper, the subprocess binds directly to the parent application's standard input and standard output streams. Upon initialization, the language server immediately blocks, entering a listening state where it waits for HTTP-like headers—specifically a strictly formatted content-length declaration—followed by a precisely constructed JSON-RPC payload.[6] Concurrently, the agent waits for the shell command to return an end-of-file exit code. Because the language server daemon never exits voluntarily without a formal shutdown sequence transmitted via JSON-RPC, both processes enter a mutual deadlock.[5]

Furthermore, because the JSON-RPC protocol implemented over standard streams lacks strict end-of-file delimiters and relies entirely on exact byte-length calculations for message parsing, naive stream reading inherently hangs the executing thread.[6] If an agent attempts to read the output without perfectly calculating the expected byte length derived from the header, the buffer read operation blocks indefinitely waiting for data that the language server has no intention of sending. This fundamental incompatibility renders raw shell execution entirely unsuitable for autonomous agent tool integration.

Standardization via the Model Context Protocol

To resolve the fragility of custom JSON-RPC wrappers and the inherent risks of standard stream deadlocks, the industry is rapidly coalescing around the Model Context Protocol. This open standard unifies prompts, context integration, and tool execution into a cohesive architectural layer.[10] The Model Context Protocol standardizes how artificial intelligence models communicate with external tools, effectively acting as a managed abstraction layer over the raw language server protocol.[12]

Leading tools interface with language servers without blocking the agent's execution loop by deploying independent servers as intermediaries.[14] Instead of the agent managing the raw JSON-RPC stream, the architecture separates concerns into highly specialized components. The server operates as a standalone process—often running continuously in the

background—that maintains the active JSON-RPC connection to the language server.[15] The client is embedded within the agent's execution loop, communicating with the intermediary server using managed transports such as server-sent events or streamable HTTP.[16]

The maintainers of the Go ecosystem have directly addressed this architectural paradigm by releasing an official software development kit for the Model Context Protocol and subsequently embedding an experimental server capability directly into the core language server.[15] By invoking the language server with specific network listening flags, the daemon exposes an HTTP-based endpoint.[18] This architectural pivot entirely eliminates the need for the agent to manage brittle standard input and output pipes, allowing the agent to issue asynchronous, non-blocking HTTP requests to the language server infrastructure.[15]

Transport Mechanism	Architecture Pattern	Agent Loop Impact	Deadlock Mitigation Strategy
Raw Shell Execution	Subprocess binding via standard pipes.	**Severe Blocking**. Agent waits for EOF which never arrives from the daemon.	None. Inherently flawed for persistent daemon orchestration.
Custom JSON-RPC	Direct byte-length parsing over standard streams.	**High Risk**. Requires custom asynchronous buffering and timeout management.	Demands rigorous implementation of JSON-RPC state machines and cancellation contexts.
MCP over Stdio	Managed subprocess via an official software development kit.	**Non-Blocking**. The kit handles message delimiting and asynchronous event routing.	The development kit provides dedicated channels for request cancellation and timeout enforcement.
MCP over HTTP/SSE	Localhost network communication with	**Fully Asynchronous**. Agent execution	Employs standard HTTP timeout contexts

	an independent daemon.	threads are entirely decoupled from the server.	and REST-like stateless interactions.

Lifecycle Management and the Initialization Handshake

Whether utilizing the Model Context Protocol or a highly customized JSON-RPC wrapper, the lifecycle of the language server must be strictly managed outside the artificial intelligence model's direct control.[8] The lifecycle is too complex to be entrusted to the non-deterministic output of a text generation engine.

In advanced orchestration environments, the language server lifecycle is entirely decoupled from the text-generation loop.[20] When a workspace is initialized by the user, the orchestration layer autonomously spawns the language server process in the background. Modern systems utilize advanced runtime utilities to launch the server with standard input and output flags while capturing the process handle for independent telemetry and management.[20]

Following the process launch, the orchestrator automatically executes the mandatory initialization handshake. This requires sending an initialization request containing the workspace root uniform resource identifier and the specific capabilities supported by the client. The server must process this request and respond with an initialization result before any tool calls can be successfully executed.[16] If a language model attempts to query the codebase before this handshake completes, the orchestrator intercepts the request and either queues it or returns a system-level error, preventing the model from hanging on an unresponsive tool interface.[21] Finally, the client must transmit an initialized notification to formally complete the connection protocol.

Decoupled Asynchronous Lifecycle Management via MCP

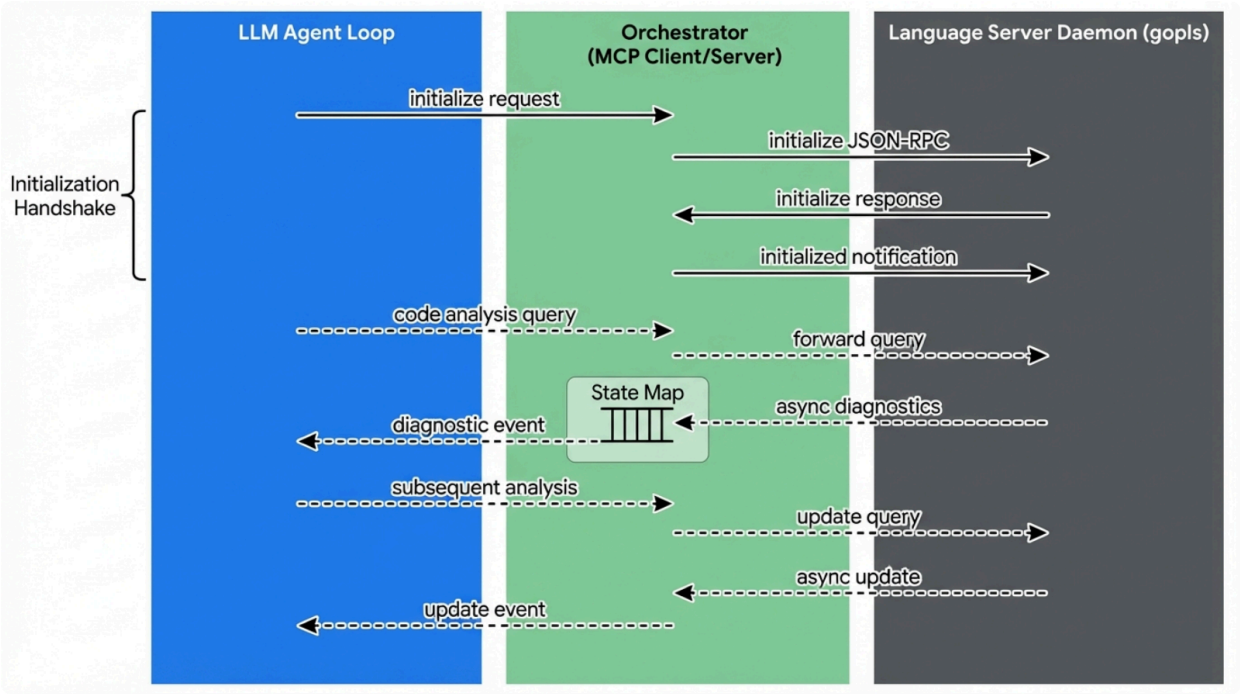

The Model Context Protocol (MCP) acts as a managed intermediary, handling the strict JSON-RPC initialization handshake with the Language Server, thereby freeing the LLM agent to operate non-deterministically without deadlocking on standard streams.

Advanced systems also implement robust event bus architectures to handle the continuous stream of asynchronous telemetry generated by the language server. As the server analyzes the workspace, it emits publishing diagnostic notifications asynchronously.[20] These diagnostics are captured by the orchestrator and stored in a globally accessible state map, entirely independent of the active generation thread.[20] This decoupling ensures that the agent can retrieve the latest workspace state at its convenience without polling or blocking.

Artificial Intelligence Tool Design and Function Abstraction

The interface design between the language model and the semantic engine dictates the ultimate efficiency and accuracy of the orchestration tool. Exposing a raw, unformatted request execution tool directly to an artificial intelligence model is a widely recognized architectural anti-pattern. Language servers require highly precise line and character offsets, specific uniform resource indicator formatting, and exact byte-based indexing that large language models notoriously fail to predict with consistency.[22] Furthermore, raw responses are densely packed with protocol-specific metadata, array structures, and redundant character range

declarations that rapidly exhaust the finite context windows of modern models.[23]

Abstracting Capabilities into High-Level Intent Tools

Modern agentic orchestration tools expose highly abstracted, intent-driven functions to the model. Rather than forcing the generation engine to format a complex JSON payload representing a request for cross-file references, the agent is provided with semantically named, domain-specific tools. The contemporary server architecture standardizes this approach by exposing specific tools directly tailored for consumption by artificial intelligence.[15]

A paramount example is the implementation of package application programming interface retrieval tools. This specific abstraction fetches the exported functions, types, and authoritative comments for a designated package, allowing the model to understand how to interact with a dependency without reading the entire underlying implementation source code.[15] By abstracting away the internal logic, the system preserves massive amounts of the context window while still delivering precisely the semantic information required for accurate code generation.

Similarly, symbol reference search tools enable the agent to query the workspace for references to a specific function or type, providing critical impact analysis data before the agent attempts to execute a widespread refactoring operation.[15] Abstracted diagnostic retrieval tools retrieve compile errors and static analysis findings formatted specifically for conversational ingestion.[24] By registering these specific abstractions, the orchestration layer assumes full responsibility for the complex translation mathematics, converting a human-readable symbol name into the exact URI, line, and character coordinates demanded by the underlying semantic engine.[23]

Abstracted LLM Tool	**Underlying Protocol Action**	**Semantic Value to the Agent**	**Context Window Impact**
analyze_symbol_impact	textDocument/references	Enables the agent to determine the blast radius of a proposed code refactor across the entire workspace.	Highly dense. Requires significant downstream summarization by the orchestrator.
get_package_api	workspace/symbol +	Provides the public interfaces and	Minimal. Preserves context for active

	AST	docstrings of a dependency without exposing private implementation details.	reasoning and task planning.
validate_codebase	Intercepts publishDiagnostics	Grounds the model with deterministic compiler feedback, halting hallucinatory code paths immediately.	Minimal. Converts raw protocol metadata into concise, human-readable error strings.
rename_workspace_symbol	textDocument/rename	Allows the agent to initiate safe, project-wide variable renaming without executing risky manual regex replacements.	None. Operates entirely as an execution command rather than a data retrieval action.

Managing Context Windows and Voluminous Response Payloads

A critical failure mode for autonomous coding agents is the phenomenon of context rot. This occurs when a massive data payload—such as a reference search returning hundreds of locations spread across dozens of interconnected files—pollutes the conversational history.[15] As the context window fills with raw, unsummarized code blocks, the model experiences severe attention degradation, frequently losing focus on its primary directive or hallucinating incorrect relationships between disparate code snippets.

Agents manage this overwhelming data deluge through several highly sophisticated architectural strategies designed to shield the model from raw protocol outputs.

The dynamic context discovery approach bypasses standard context injection entirely. To prevent the truncation of long shell commands or voluminous semantic results, the agent framework intercepts the response payload directly from the server. Instead of appending the

result to the conversation history, the orchestrator writes the raw output to a hidden temporary file within the local workspace.[25] The framework then provides the model with a synthesized system message containing the precise file path and access instructions. The model is subsequently equipped with specialized file system tools to selectively read, search, or paginate through this temporary file. This indirect mechanism allows the agent to recursively analyze massive reference maps or dense compiler logs without injecting the entire payload into the active context window, significantly reducing token consumption and mitigating the retrieval degradation commonly referred to as the needle-in-a-haystack problem.[26]

Conversely, the graph-based relevance ranking approach applies advanced mathematical principles to semantic code retrieval. Instead of dumping raw responses into a file or context window, the system constructs a complex repository graph where individual source files operate as nodes and cross-file references act as weighted edges.[28] Utilizing algorithms conceptually similar to PageRank, the system calculates the relative importance of symbols and files based on their systemic interconnectedness.[28] When the agent requests context regarding a specific domain, the orchestrator prunes the combined output, delivering a highly summarized repository map that fits strictly within a predefined, immutable token budget—often restricted to approximately one thousand tokens.[28] This meticulously curated map contains only the most critical architectural interfaces and call signatures, ensuring the model maintains high-level structural awareness without becoming bogged down in implementation minutiae.

The Deterministic Diagnostic Feedback Loop

Advanced orchestrators elevate the language model from a passive, predictive text generator to an active, tightly integrated participant in the compilation lifecycle. When the model executes a tool to modify a source code file, the orchestrator automatically triggers the appropriate change notifications to the semantic engine running in the background.[20]

Crucially, the orchestrator immediately intercepts the subsequent diagnostic payloads emitted by the language server. The system parses these payloads and seamlessly appends any resulting syntax errors, strict type mismatches, or undefined variable warnings directly back into the model's observation space.[20] This immediate, deterministic feedback loop prevents the agent from spiraling into compounded hallucinations. If the model hallucinates the implementation of a complex interface, the diagnostic engine immediately grounds the model with a definitive error report, prompting a recursive self-correction iteration.[20] This mechanism transforms the coding process into a highly iterative, scientifically grounded feedback loop, fundamentally bridging the gap between probabilistic text generation and deterministic software compilation.

The Semantic Split: Structural Parsing Versus Dynamic

Analysis

A highly nuanced observation in the development of enterprise-grade coding agents is the explicit division of labor established between static structural parsing engines and dynamic semantic analysis protocols. As explicitly noted by the creators of modern parsing libraries, these two technologies solve fundamentally different problems within the realm of codebase comprehension. Modern agents require a meticulously balanced hybrid architecture to achieve optimal performance without incurring paralyzing latency or computational overhead.[3]

Fast, Local, and Structural Code Analysis

Static parsing libraries are engineered for sub-millisecond execution, generating a comprehensive abstract syntax tree directly from source code text.[3] This operation is performed entirely locally and does not require a functional build environment, resolved external dependencies, or a continuously running daemon process. This inherent speed and environmental independence make it the foundational layer for an agent's initial orientation within an unfamiliar repository.

Agents deploy structural parsing for tasks where instantaneous response times and broad structural awareness are paramount. During initial codebase mapping, the orchestration framework utilizes parsing libraries to analyze the entire repository instantly upon startup.[28] It executes highly localized, targeted queries to extract function signatures, class definitions, and receiver types without incurring the massive overhead required to initialize a formal language server workspace.[28]

Furthermore, structural parsing heavily informs semantic chunking for retrieval-augmented generation pipelines. Instead of arbitrarily splitting code files by strict line numbers or character limits—which frequently fractures conditional logic and destroys context—agents use the syntax tree to chunk code into logically coherent blocks.[22] Preserving complete function declarations or class structures dramatically improves retrieval accuracy and comprehension when feeding code segments into the language model.[22]

Structural parsing also enables surgical prompt injection. For a repository written in Go, an agent orchestrator can execute specialized s-expression queries to isolate specific parameters.[34] By filtering the syntax tree based on node types and assigned predicates, the orchestrator extracts only the necessary structural skeleton. This skeleton is then injected into the model's prompt, intentionally withholding the voluminous and potentially distracting implementation bodies, thereby maximizing the efficiency of the context window.

Deep, Dynamic, and Semantic Validation

While structural parsing excels at analyzing a single file's syntax at lightning speed, it possesses severe limitations regarding systemic comprehension. It fundamentally lacks the capacity to

resolve complex cross-file dependencies, infer dynamic generic types across module boundaries, or execute strict compiler-level validation.[3]

The language server protocol is invoked when the agent requires absolute, deterministic semantic truth. Complex queries such as locating all external types that successfully implement a specific interface, or executing a project-wide symbol renaming operation, require a fully compiled and linked representation of the project workspace.[24] The semantic engine possesses the capability to trace intricate variable shadowing, follow deep pointer dereferences through multiple layers of abstraction, and provide hover documentation that is dynamically pulled from external, vendor-managed packages located outside the primary repository.[37]

The Semantic Split: Tree-sitter vs. LSP Capabilities

Feature	Tree-sitter	Language Server Protocol (LSP)
Primary Function	Fast syntax parsing, structural queries, and local code intelligence (symbol extraction, call graphs).	Semantic intelligence, type info, completions, diagnostics, and refactoring.
Latency	< 1ms	50-100ms+
Cross-File Awareness	Local context (parses individual files into ASTs to build index/repomap).	Deep cross-file reference tracking and scope resolution.
Build Requirement	✕ No (Works instantly without config or language server).	✓ Yes (Requires full language server, project config, and working build).
Agent Use Case	Instantaneous codebase mapping, chunking, and structural context retrieval.	Strict type validation, deep semantic analysis, and tracking cross-file dependencies.

Modern agents deploy Tree-sitter for instantaneous codebase mapping and chunking, reserving the slower, resource-intensive Language Server Protocol for strict type validation and cross-file reference tracking.

Data sources: Bytelota, Hacker News, Reddit, Dev.to, Aider Blog

Orchestrating the Architectural Handoff

The most capable tools in the ecosystem employ a highly strategic architectural handoff between these two engines to optimize agent performance.[2]

During the initial phase of fast contextualization, the agent initiates its task planning utilizing the instantaneous structural map provided by the syntax tree. This allows the model to rapidly

locate the correct architectural files, understand the high-level skeleton of the codebase, and begin formulating an execution strategy before the resource-intensive language server has even finished booting or indexing the workspace.[2]

Once the agent identifies a target symbol and formally proposes a code edit, the system transitions into the precision execution phase. The orchestrator queries the language server to execute a deep trace of all references, guaranteeing that the proposed modification will not inadvertently fracture any downstream dependencies located in distinct packages.[2] Immediately after the orchestrator applies the edit to the file system, the language server provides continuous, deterministic diagnostic validation, closing the execution loop.[20] This hybrid approach effectively masks the latency of the semantic engine while leveraging its absolute accuracy.

Environment Provisioning and Dependency Management Architecture

Operating an autonomous artificial intelligence agent across a wide variety of disparate development environments introduces a severe friction point in user experience and operational reliability. The agent framework cannot reliably assume that the host machine possesses the correct language servers, compilers, syntax parsers, or environment variables required for successful execution.[39] A system that simply fails and emits an opaque command execution error when a dependency is missing is fundamentally unsuited for autonomous operations.

Autonomous Provisioning and Binary Installation

State-of-the-art tools implement sophisticated autonomous provisioning logic to guarantee operational stability across heterogeneous environments. Instead of failing gracefully, these orchestrators proactively modify the host environment to ensure all necessary semantic engines are available.

The provisioning lifecycle begins with advanced runtime discovery mechanisms. The orchestrator inspects the host system's executable paths to verify the presence of necessary binaries.[20] If the required binary is absent, the orchestrator does not prompt the user; instead, it silently executes package managers in the background to provision the required server into a designated temporary directory or an application-specific managed environment folder.[18] For instance, if the Go language server is missing, the system will autonomously execute the standard Go installation command to pull the latest version directly into the orchestrator's isolated path.

Furthermore, advanced analytical tools utilize language-aware meta-runners that deeply inspect the repository's source code to detect the primary programming language. Upon

detection, these systems auto-provision strictly pinned versions of required binaries, ensuring that the agent operates against a known, stable, and heavily tested protocol version rather than relying on an outdated binary that may be globally installed on the user's workstation.[40] This strict version control is vital for maintaining consistent JSON-RPC payload structures.

Lazy Loading and Bounded Schema Growth

A critical systemic optimization identified in recent research on artificial intelligence tooling is the mandatory implementation of lazy loading for environment dependencies and tool schemas.[39] Early agent architectures eagerly provisioned and loaded interface schemas for every possible language server supported by the framework during initial startup. This eager loading strategy consumed massive amounts of system memory and, critically, bloated the language model's system prompt with hundreds of irrelevant tool definitions.[39]

Supplying a model with Python, Rust, and TypeScript semantic analysis tools when it is attempting to debug a Go repository severely degrades the model's instruction adherence and exhausts the token budget before any active reasoning can occur. Instead, the orchestrator must dynamically inspect the workspace root to identify the specific environmental context. Upon identifying a Go module file, the system dynamically provisions only the relevant Go binaries and registers only the Go-specific tool schemas with the language model.[20] This bounded schema growth ensures the agent focuses its entire context window and attention mechanisms solely on the relevant semantic domain, drastically reducing hallucinated tool calls and improving overall systemic efficiency.

Concrete Recommendations for Implementation

Based on the exhaustive analysis of state-of-the-art architectures, the following step-by-step technical recommendations establish a definitive roadmap for constructing a resilient, highly capable codebase orchestration tool within the Go programming ecosystem.

Architecture Strategy: Native SDK Integration Over Custom Wrappers

The foundational recommendation is to entirely abandon the development of a custom JSON-RPC wrapper executed via standard shell pipes. While generic remote procedure call packages exist and are theoretically capable of the task [8], managing the complex three-way initialization handshake, bidirectional stream cancellation, and rigorous error-handling requirements dictated by the language server specification is a massive engineering burden that inherently introduces the risk of infinite execution hangs.[16]

Instead, the architecture must integrate the officially maintained Model Context Protocol software development kit.[16] This highly optimized development kit natively handles the complex

lifecycle protocols, manages bidirectional stream state, and is the exact underlying technology that powers the internal server implementation within the Go compiler toolchain itself.[42]

The implementation sequence should proceed by configuring the orchestration interface to execute the language server as a detached, background subprocess utilizing the specific network listening flags required to expose a local HTTP endpoint.[18] This architectural decision forces the language server into a true daemon mode utilizing a standard network transport, completely sidestepping the standard input and output pipe deadlock vulnerabilities.[5] Subsequently, the orchestration tool must utilize the development kit's client interfaces to establish a robust, multiplexed connection to this local endpoint.[16] Finally, the tools dynamically discovered from the server must be programmatically bound to the language model's native function-calling interface, enabling seamless execution.

High-Yield Function Abstractions for Language Models

When binding the language model to the semantic engine, the orchestrator must avoid exposing raw protocol requests. Instead, it should register a highly curated set of abstracted tools designed explicitly for conversational artificial intelligence.

The most critical tool to register is a package interface retrieval function. Backed by the underlying language server, this tool allows the model to query the public signatures, strictly typed parameters, and official documentation of any imported package without forcing the model to ingest thousands of lines of implementation code.[15] This mechanism solves the severe context-exhaustion problem typically encountered when a model attempts to utilize an unfamiliar external dependency or deeply nested private module.[15]

The second mandatory abstraction is a symbol impact analysis tool. This function executes a project-wide search for all cross-file references to a specific function, struct, or interface.[15] Providing this capability is essential for enabling safe, complex refactoring operations. If the language model intends to alter a core struct, the orchestrator must require the model to first execute this tool to identify every dependent file that requires a corresponding update, thereby preventing fractured builds.

The third crucial abstraction is a deterministic codebase validation tool. This function triggers a comprehensive static analysis pass over the entire workspace, aggregating syntax errors, type failures, and linter warnings.[20] This tool is the keystone of the autonomous execution loop. The agent proposes and executes a code edit, immediately invokes the validation tool, and recursively processes any resulting compiler errors until the build succeeds.[20]

Systemic Mitigations Against Infinite Execution Hangs

To guarantee the absolute resilience of the command-line interface, the core architecture must implement aggressive, granular defensive boundaries against both the stateful daemon processes and the non-deterministic output of the language model.

The migration to a streamable HTTP transport fundamentally resolves inter-process pipe blocking [16], but network timeouts alone are insufficient for robust agentic workflows. The orchestrator must implement strict budget-aware execution runtimes.[43] The system must enforce a hard cap on the maximum number of iterative, sequential tool calls the model can execute within a single reasoning loop.[43] If the model enters a recursive hallucination loop—repeatedly attempting and failing to satisfy a complex compiler error—the orchestrator must forcefully terminate the execution sequence, preserve the error state, and return interactive control to the human developer.

Furthermore, to prevent the model from hanging while attempting to process massive data payloads, the orchestrator must implement dynamic context discovery mechanisms utilizing the local file system.[25] If an invoked tool returns a payload exceeding a predefined strict byte limit, the orchestrator must automatically redirect the response to a managed temporary file. The orchestrator then returns a concise system message to the model indicating that the output was too large and providing instructions to utilize a specialized file reading tool to inspect the contents incrementally.[25] This pagination strategy is critical for preserving systemic stability when analyzing enterprise-scale repositories.

The transition from naive, predictive code generation to deterministic, fully agentic codebase orchestration requires a fundamental re-architecture of how artificial intelligence models perceive and interact with their operating environments. By abandoning fragile shell wrappers in favor of standardized context protocols, and by embracing a meticulously balanced hybrid semantic approach, orchestration frameworks can provide language models with surgical precision while fiercely protecting finite computational resources. Adopting these state-of-the-art paradigms ensures that the agent operates as a fully integrated, context-aware, and highly deterministic participant in the software development lifecycle.

Works cited

1. Tree-sitter-based Repo Map · Issue #3382 · block/goose - GitHub, accessed March 8, 2026, https://github.com/block/goose/issues/3382
2. ata v0.4.0: LSP + Tree-Sitter gives our AI coding and research agent semantic code understanding : r/codex - Reddit, accessed March 8, 2026, https://www.reddit.com/r/codex/comments/1rmp93u/ata_v040_lsp_treesitter_gives_our_ai_coding_and/
3. Tree-sitter vs LSP: Why Hybrid IDE Architecture Wins | byteiota, accessed March 8, 2026, https://byteiota.com/tree-sitter-vs-lsp-why-hybrid-ide-architecture-wins/
4. tramp + lsp + gopls = :(: r/emacs - Reddit, accessed March 8, 2026, https://www.reddit.com/r/emacs/comments/vhihjl/tramp_lsp_gopls/

5. Connecting to a Typescript JSON RPC server via a Go client - Stack Overflow, accessed March 8, 2026, https://stackoverflow.com/questions/78610168/connecting-to-a-typescript-json-rpc-server-via-a-go-client
6. Best way to talk in non-blocking JSON-RPC with an LSP? : r/learnpython - Reddit, accessed March 8, 2026, https://www.reddit.com/r/learnpython/comments/xwi646/best_way_to_talk_in_nonblocking_jsonrpc_with_an/
7. Gopls: Design - The Go Programming Language, accessed March 8, 2026, https://go.dev/gopls/design/design
8. jrpc2 package - github.com/creachadair/jrpc2 - Go Packages, accessed March 8, 2026, https://pkg.go.dev/github.com/creachadair/jrpc2
9. GNU bug reports: Normal bugs - outstanding, accessed March 8, 2026, https://debbugs.gnu.org/db/si/pendingnormal.html
10. Model Context Protocol GO. Unleashing Your Agent | by Scott Novis - Medium, accessed March 8, 2026, https://scottnovis.medium.com/model-context-protocol-go-359da4bf1ee8
11. config.yaml Reference | Continue Docs, accessed March 8, 2026, https://docs.continue.dev/reference
12. A Developer's Intro to the Agent Client Protocol (ACP) - Calum Murray, accessed March 8, 2026, https://www.calummurray.ca/blog/intro-to-acp
13. Model Context Protocol MCP SDK Go-MCP is Now Open Source! | by Jesse - Medium, accessed March 8, 2026, https://medium.com/@zhangyu.jesse_51876/model-context-protocol-mcp-sdk-go-mcp-is-now-open-source-956faae65544
14. Plugins reference - Claude Code Docs, accessed March 8, 2026, https://code.claude.com/docs/en/plugins-reference
15. Experiment with gopls MCP: Improving Agent Context for Go ... - Dev.to, accessed March 8, 2026, https://dev.to/calvinmclean/experiment-with-gopls-mcp-improving-agent-context-for-go-development-37bo
16. How to Build an MCP Server with Gemini CLI and Go | by Daniela Petruzalek | Google Cloud - Medium, accessed March 8, 2026, https://medium.com/google-cloud/how-to-build-an-mcp-server-with-gemini-cli-and-go-6184a5d4ba83
17. Go's Sweet 16 - The Go Programming Language, accessed March 8, 2026, https://go.dev/blog/16years
18. How to use gopls MCP with VS Code - DEV Community, accessed March 8, 2026, https://dev.to/calvinmclean/how-to-use-gopls-mcp-with-vs-code-11ha
19. Go MCP SDK: The Game-Changing Release That's Shaking Up the AI Market - Medium, accessed March 8, 2026, https://medium.com/@unrealandychan/go-mcp-sdk-the-game-changing-release-thats-shaking-up-the-ai-market-9ec9d1bfcccd
20. How Coding Agents Actually Work: Inside OpenCode | Moncef Abboud, accessed March 8, 2026,

https://cefboud.com/posts/coding-agents-internals-opencode-deepdive/
21. x/tools/gopls: consider avoiding the workspace/configuration request · Issue #57329 · golang/go - GitHub, accessed March 8, 2026, https://github.com/golang/go/issues/57329
22. How Cursor Works Internally? - Aditya Rohilla, accessed March 8, 2026, https://adityarohilla.com/2025/05/08/how-cursor-works-internally/
23. An Exploratory Study of Code Retrieval Techniques in Coding Agents - Preprints.org, accessed March 8, 2026, https://www.preprints.org/manuscript/202510.0924
24. Yantrio/mcp-gopls: Go language server (gopls) wrapped as an MCP server for AI-powered code assistance in Claude and other MCP-compatible tools - GitHub, accessed March 8, 2026, https://github.com/Yantrio/mcp-gopls
25. Dynamic context discovery - Cursor, accessed March 8, 2026, https://cursor.com/blog/dynamic-context-discovery
26. Cursor's New Context Discovery Principles Can Transform How You Use Any AI Coding Tool | by AI Labs - Medium, accessed March 8, 2026, https://medium.com/@ai-labs/cursors-new-context-discovery-principles-can-transform-how-you-use-any-ai-coding-tool-d379191d4f25
27. In Cursor, Context is King. - DEV Community, accessed March 8, 2026, https://dev.to/gvegacl/in-cursor-context-is-king-3ai7
28. Building a better repository map with tree sitter | aider, accessed March 8, 2026, https://aider.chat/2023/10/22/repomap.html
29. Agent Interfaces: Bridging LLMs and Software Engineering - Logesh Kumar Umapathi, accessed March 8, 2026, https://logeshumapathi.com/blog/2024/08/03/agent-interfaces.html
30. RFC 001 - Remove SCIP Dependency and Implement Tree-sitter Based File-Incremental Indexing · sheeptechnologies · Discussion #4 - GitHub, accessed March 8, 2026, https://github.com/orgs/sheeptechnologies/discussions/4
31. Improving GPT-4's codebase understanding with ctags - Aider, accessed March 8, 2026, https://aider.chat/docs/ctags.html
32. Relationship with LSP (especially coc.nvim) · Issue #484 - GitHub, accessed March 8, 2026, https://github.com/nvim-treesitter/nvim-treesitter/issues/484
33. Repository context for LLM assisted code completion | Tabby AI coding assistant, accessed March 8, 2026, https://www.tabbyml.com/blog/repository-context-for-code-completion
34. Digging Deeper into Code with Tree-Sitter: How to Query Your Syntax Tree, accessed March 8, 2026, https://dev.to/shailendra53/digging-deeper-into-code-with-tree-sitter-how-to-query-your-syntax-tree-3i1
35. Query Syntax - Tree-sitter, accessed March 8, 2026, https://tree-sitter.github.io/tree-sitter/using-parsers/queries/1-syntax.html
36. Show HN: CodeRLM – Tree-sitter-backed code indexing for LLM agents | Hacker News, accessed March 8, 2026, https://news.ycombinator.com/item?id=46974515
37. Gopls: Navigation features - The Go Programming Language, accessed March 8, 2026, https://go.dev/gopls/features/navigation

38. Here it is always how, not why. - Stupid smart things or smart stupid things, accessed March 8, 2026, https://blog.sshadows.dk/
39. Building AI Coding Agents for the Terminal: Scaffolding, Harness, Context Engineering, and Lessons Learned - arXiv, accessed March 8, 2026, https://arxiv.org/html/2603.05344v1
40. Dicklesworthstone/ultimate_bug_scanner: Static analysis tool that catches 1000+ bug patterns across all popular programming languages, with auto-wiring into AI coding agent quality guardrails - GitHub, accessed March 8, 2026, https://github.com/Dicklesworthstone/ultimate_bug_scanner
41. tsirysndr/my-awesome-stars: A curated list of my Github stars!, accessed March 8, 2026, https://github.com/tsirysndr/my-awesome-stars
42. Go SDK: Design · modelcontextprotocol · Discussion #364 - GitHub, accessed March 8, 2026, https://github.com/orgs/modelcontextprotocol/discussions/364
43. The "Infinite Loop" fear is real. How are you preventing your agents from burning $100 in 10 minutes? - Reddit, accessed March 8, 2026, https://www.reddit.com/r/AI_Agents/comments/1qnavt9/the_infinite_loop_fear_is_real_how_are_you/
44. How to Build Reliable Task-Handling AI Agents Without Getting Stuck in Loops - Reddit, accessed March 8, 2026, https://www.reddit.com/r/AI_Agents/comments/1rgcf77/how_to_build_reliable_taskhandling_ai_agents/